# SOLATUBE 160 DS
# (10 IN / 250 MM)
# PITCHED SELF-FLASHING
# HARD CEILING W/TIER DROP

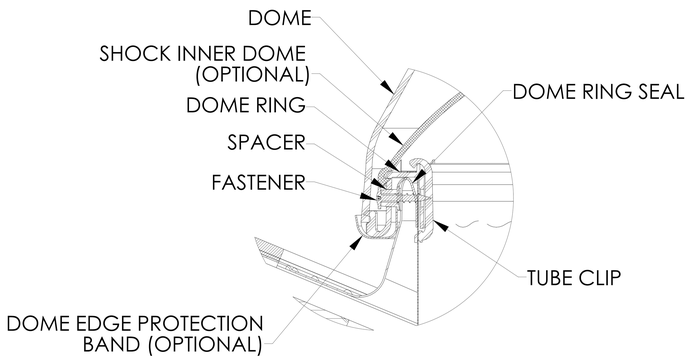


**DETAIL A**
**SCALE 3 : 1**

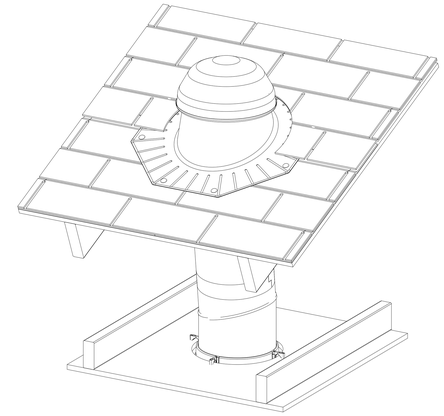

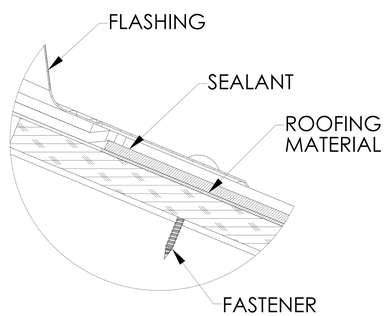


**DETAIL B**
**SCALE 3 : 1**

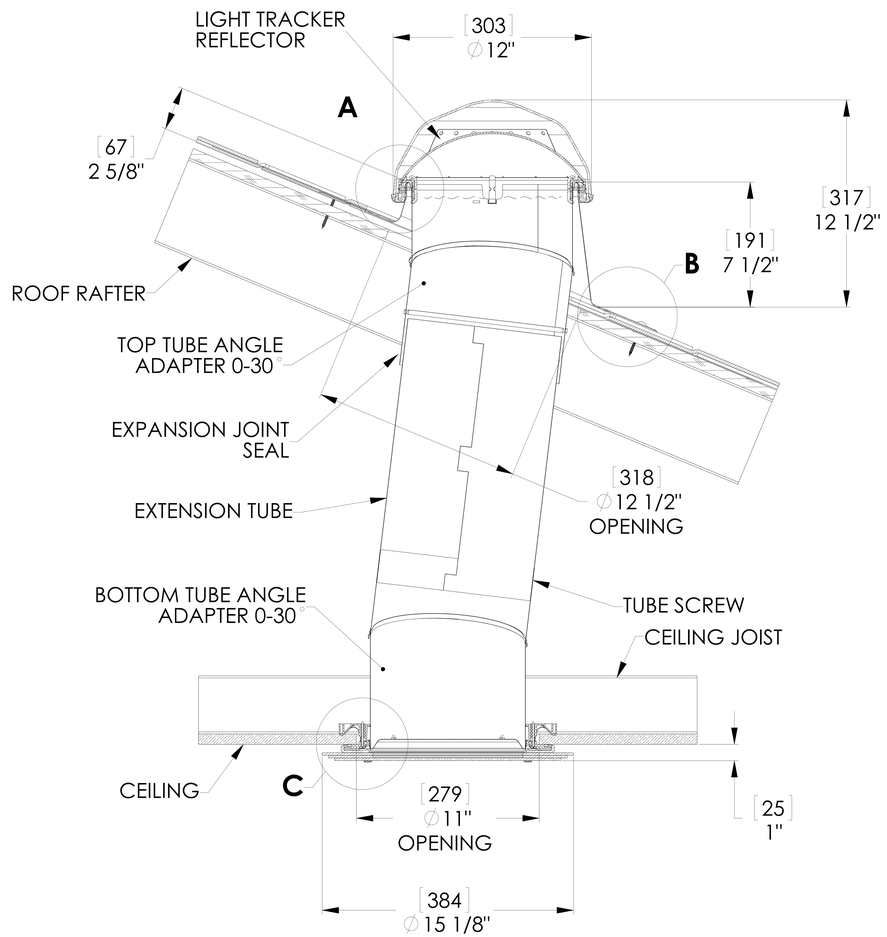


**FULL SECTION**
**SCALE 1:1**

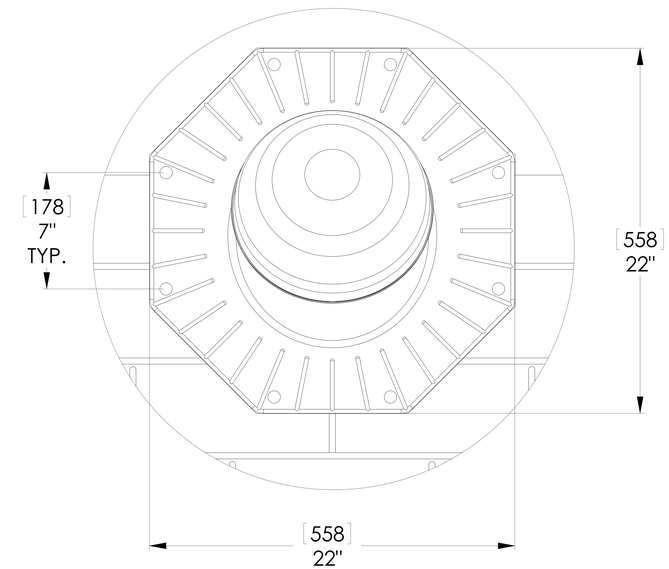


**TOP VIEW**

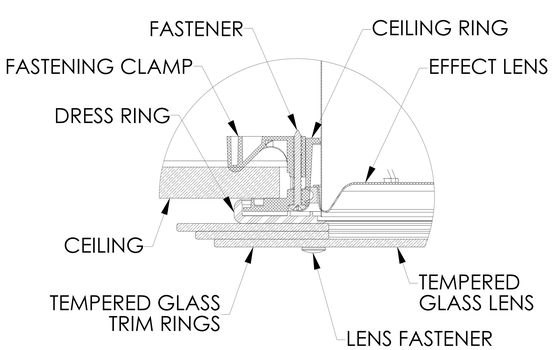


**DETAIL C**
**SCALE 3 : 1**

NOTES:

1. STRUCTURAL ELEMENTS (PLYWOOD, RAFTERS, DRYWALL ETC. BY OTHERS & SHOWN FOR REFERENCE ONLY.
2. ALL TUBE JOINTS & SEAMS TAPED WITH 2" FOIL TAPE (NOT SHOWN).
3. DIMENSIONS IN BRACKETS ARE METRIC UNLESS OTHERWISE SPECIFIED.
4. 6" MIN CLEARANCE SHOULD BE MAINTAINED FROM ALL SOLATUBE COMPONENTS AND OTHER PLENUM COMPONENTS.

| | | |
|---|---|---|
| UNLESS OTHERWISE SPECIFIED:<br>DIMENSION TOLERANCE<br>FRACTION : ±1/4"<br>INCH .X ± .1 MILLIMETER [.X] ± 2.5 | SOLATUBE INTERNATIONAL, INC.<br>COPYRIGHT 2011<br>WWW.SOLATUBE.COM | SOLATUBE<br>2210 OAK RIDGE WAY<br>VISTA, CALIFORNIA 92081-8341<br>PH (760) 597-4400 |
| MATERIAL<br>--<br>-- | DRAWN BY STEVENS / DATE 10/4/10 | TITLE: SOLATUBE 160 DS PITCHED SELF-FLASHING HARD CEILING (TD) |
| FINISH<br>-- | CHECKED BY -- / DATE -- | SIZE / DWG. NO. WEB-160DS-SFP-HC-TD / REV A |
| DO NOT SCALE DRAWING | APPROVED BY -- / DATE -- | SCALE: 1:1 / SHEET 1 OF 1 |